Designer Collection Shower Bases

MTSB-5040BF

50" x 40.25" x 1.875" (exterior bottom of base)
MULTIPLE, LOW-PROFILE THRESHOLD textured floor
Center Drain
Acrylic CXL®
115 lbs / 52 kg

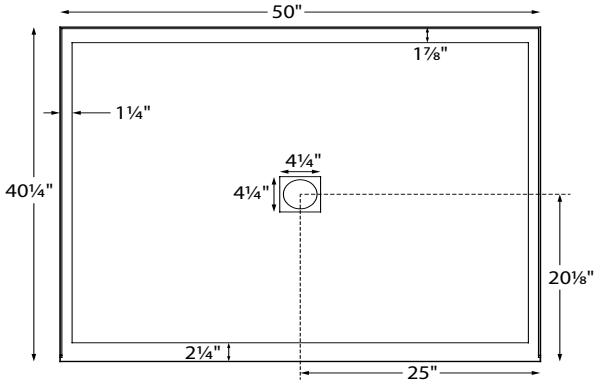

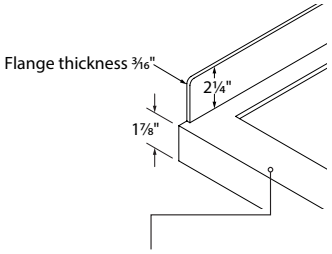

Designed to be recessed into floor, to create a flat transfer surface.

Model #	Size	Shape	MSRP
SB5040BF	50" x 40.25" x 1.875"	Rectangle	**$1,665**

Options *Must be ordered at time of purchase*

Color Please specify color on order
White (CWH)
Biscuit (CBS)

Quick Ship (QSPRI) **$430**
Reduces lead time. Please call for availability.

Radiance® (RAD100) **$1,595** Shower floor heating system.
Radiance heating grids are fully integrated within the acrylic shell structure of the shower floor. Requires a 110-volt, 15 amp GFCI and remote installation of control box & keypad.

Pre-Leveled Foam Base (PLFSB) **$220**

PVC Drain Kit Finishes Chrome included with shower base
Brushed Nickel upcharge (SBSQDBN) **$125**

Optional Removable Front Threshold (SBT50) **$250**
Measures 2¼" tall

Accessories

Drain Kit
Solid Brass Drain Kit with Stainless Steel Cover (SBSQDSB) **$195**

Teak Shower Seat
Premium
Natural Stainless (TK-SSEAT2416BNS) **$3,035**
High-Polished Stainless (TK-SSEAT2416BHP) **$3,465**
Premium ADA
Natural Stainless (TK-SSEAT2416BNSA) **$3,630**
High-Polished Stainless (TK-SSEAT2416BHPA) **$4,155**
Standard
Natural Stainless (TK-SSEAT2215NS) **$1,125**
High-Polished Stainless (TK-SSEAT2215HP) **$1,575**

Optional threshold installed.

IMPORTANT ORDERING & INSTALLATION INFORMATION

- Zero-barrier single front threshold design for ease of transition between bathroom and shower area. Must be recessed into floor to create a flat transfer surface.
- 3-sided integral tile flange to facilitate installation.
- 3.5" drain opening pre-drilled.
- Drain finish options on this sheet are upcharge prices only. Contact MTI for ordering details for drain kits sold seprately. Compliant with ASTM C 1028-07 coefficient of friction test.
- Add proper wet-bedding compound to fully support bottom of shower base. Optional factory installed Pre-Leveled Foam Base negates the need to wet bed when installing on a flat, level subfloor. See installation instructions.

- Options and accessories may be packaged inside the box. Always check packaging before discarding.
- All product measurements are ±1/2".
- Specifications and configurations are subject to change without notice.
- Measurements herein supersede all others published prior to publication date below.

See the Installation & Operation Manual for more details.
MTI's Customer Service: Monday-Friday 8am-6pm EST
800-783-8827 or service@mtibaths.com

CSA # MTSB-5040BF

©2023 by MTI Baths, Inc. Modification Rights Reserved